FSC4681,5,8NDL
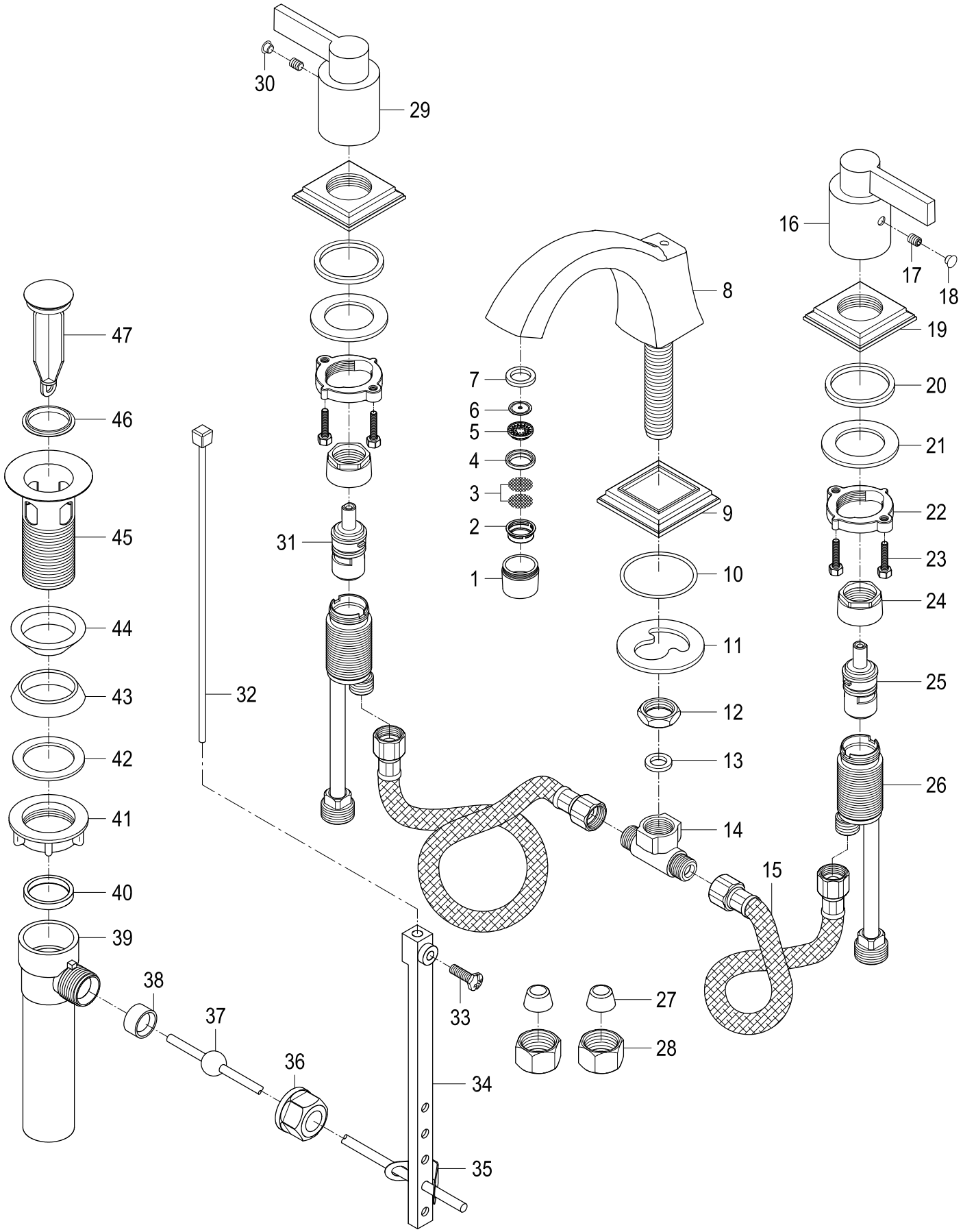
Widespread Lavatory Faucet with Retail Pop-Up